L4949, NCV4949

100 mA, 5.0 V, Low Dropout Voltage Regulator with Power-On Reset

The L4949 is a monolithic integrated 5.0 V voltage regulator with a very low dropout and additional functions such as power−on reset and input voltage sense.

It is designed for supplying the micro−computer controlled systems especially in automotive applications.

Features

- Operating DC Supply Voltage Range 5.0 V to 28 V
- Transient Supply Voltage Up to 40 V
- Extremely Low Quiescent Current in Standby Mode
- High Precision Standby Output Voltage 5.0 V ±1%
- Output Current Capability Up to 100 mA
- Very Low Dropout Voltage Less Than 0.4 V
- Reset Circuit Sensing The Output Voltage
- Programmable Reset Pulse Delay With External Capacitor
- Voltage Sense Comparator
- Thermal Shutdown and Short Circuit Protections
- NCV Prefix for Automotive and Other Applications Requiring Site and Control Changes
- Pb−Free Packages are Available

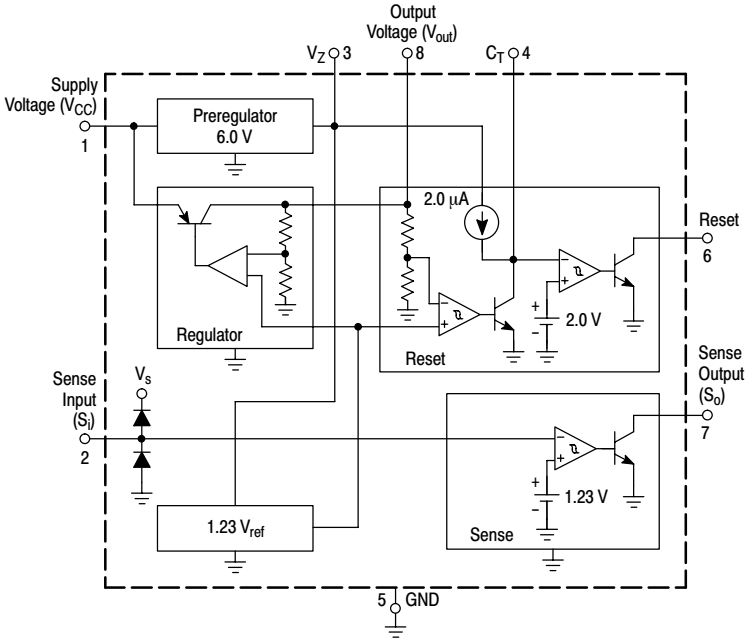

Figure 1. Representative Block Diagram

ON Semiconductor®

http://onsemi.com

MARKING DIAGRAMS

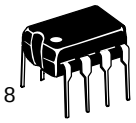

PDIP−8
N SUFFIX
CASE 626

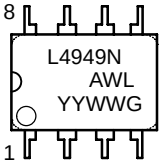

SOIC−8
D SUFFIX
CASE 751

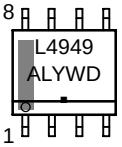

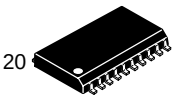

SOIC−20W
DW SUFFIX
CASE 751D

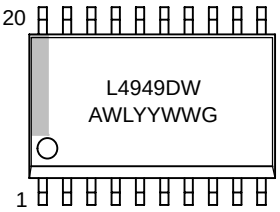

A = Assembly Location
WL, L = Wafer Lot
YY, Y = Year
WW, W = Work Week
G or ▪ = Pb−Free Device

PIN CONNECTIONS

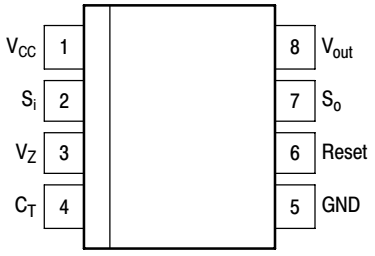

(Top View)

ORDERING INFORMATION

See detailed ordering and shipping information in the package dimensions section on page 8 of this data sheet.

© Semiconductor Components Industries, LLC, 2006

ABSOLUTE MAXIMUM RATINGS

Rating	Symbol	Value	Unit
DC Operating Supply Voltage	V_{CC}	28	V
Transient Supply Voltage (t < 1.0 s)	$V_{CC\ TR}$	40	V
Output Current	I_{out}	Internally Limited	−
Output Voltage	V_{out}	20	V
Sense Input Current	I_{SI}	±1.0	mA
Sense Input Voltage	V_{SI}	V_{CC}	−
Output Voltages Reset Output Sense Output	 V_{Reset} V_{SO}	 20 20	V
Output Currents Reset Output Sense Output	 I_{Reset} I_{SO}	 5.0 5.0	mA
Preregulator Output Voltage	V_Z	7.0	V
Preregulator Output Current	I_Z	5.0	mA
ESD Protection at any pin Human Body Model Machine Model	 − −	 2000 400	V
Thermal Resistance, Junction−to−Air P Suffix, DIP−8 Plastic Package, Case 626 D Suffix, SOIC−8 Plastic Package, Case 751 D Suffix, SOIC−20 Plastic Package, Case 751D	$R_{\theta JA}$	 100 200 80	°C/W
Operating Junction Temperature Range	T_J	−40 to +150	°C
Storage Temperature Range	T_{stg}	−65 to +150	°C

Stresses exceeding Maximum Ratings may damage the device. Maximum Ratings are stress ratings only. Functional operation above the Recommended Operating Conditions is not implied. Extended exposure to stresses above the Recommended Operating Conditions may affect device reliability.

ELECTRICAL CHARACTERISTICS (V_{CC} = 14 V, −40°C < T_A < 125°C, unless otherwise specified.)

Characteristic	Symbol	Min	Typ	Max	Unit
Output Voltage (T_A = 25°C, I_{out} = 1.0 mA)	V_{out}	4.95	5.0	5.05	V
Output Voltage (6.0 V < V_{CC} < 28 V, 1.0 mA < I_{out} < 50 mA)	V_{out}	4.9	5.0	5.1	V
Output Voltage (V_{CC} = 35 V, t < 1.0 s, 1.0 mA < I_{out} < 50 mA)	V_{out}	4.9	5.0	5.1	V
Dropout Voltage I_{out} = 10 mA I_{out} = 50 mA I_{out} = 100 mA	V_{drop}	 − − −	 0.1 0.2 0.3	 0.25 0.40 0.50	V
Input to Output Voltage Difference in Undervoltage Condition (V_{CC} = 4.0 V, I_{out} = 35 mA)	V_{IO}	−	0.2	0.4	V
Line Regulation (6.0 V < V_{CC} < 28 V, I_{out} = 1.0 mA)	Reg_{line}	−	1.0	20	mV
Load Regulation (1.0 mA < I_{out} < 100 mA)	Reg_{load}	−	8.0	30	mV
Current Limit V_{out} = 4.5 V V_{out} = 0 V	I_{Lim}	 105 −	 200 100	 400 −	mA
Quiescent Current (I_{out} = 0.3 mA, T_A < 100°C)	I_{QSE}	−	150	260	μA
Quiescent Current (I_{out} = 100 mA)	I_Q	−	−	5.0	mA

ELECTRICAL CHARACTERISTICS (continued) (V_{CC} = 14 V, −40°C < T_A < 125°C, unless otherwise specified.)

Characteristic	Symbol	Min	Typ	Max	Unit
RESET					
Reset Threshold Voltage	V_{Resth}	−	V_{out} − 0.5	−	V
Reset Threshold Hysteresis @ T_A = 25°C @ T_A = −40 to +125°C	$V_{Resth,hys}$	 50 50	 100 −	 200 300	mV
Reset Pulse Delay (C_T = 100 nF, $t_R \geq$ 100 μs)	t_{ResD}	55	100	180	ms
Reset Reaction Time (C_T = 100 nF)	t_{ResR}	−	5.0	30	μs
Reset Output Low Voltage (R_{Reset} = 10 kΩ to V_{out}, $V_{CC} \geq$ 3.0 V)	V_{ResL}	−	−	0.4	V
Reset Output High Leakage Current (V_{Reset} = 5.0 V)	I_{ResH}	−	−	1.0	μA
Delay Comparator Threshold	V_{CTth}	−	2.0	−	V
Delay Comparator Threshold Hysteresis	$V_{CTth, hys}$	−	100	−	mV
SENSE					
Sense Low Threshold (V_{SI} Decreasing = 1.5 V to 1.0 V)	V_{SOth}	1.16	1.23	1.35	V
Sense Threshold Hysteresis	$V_{SOth,hys}$	20	100	200	mV
Sense Output Low Voltage ($V_{SI} \leq$ 1.16 V, $V_{CC} \geq$ 3.0 V, R_{SO} = 10 kΩ to V_{out})	V_{SOL}	−	−	0.4	V
Sense Output Leakage (V_{SO} = 5.0 V, $V_{SI} \geq$ 1.5 V)	I_{SOH}	−	−	1.0	μA
Sense Input Current	I_{SI}	−1.0	0.1	1.0	μA
PREREGULATOR					
Preregulator Output Voltage (I_Z = 10 μA)	V_Z	−	6.3	−	V

PIN FUNCTION DESCRIPTION

Pin SOIC−8, PDIP−8	Pin SOIC−20W	Symbol	Description
1	19	V_{CC}	Supply Voltage
2	20	S_i	Input of Sense Comparator
3	1	V_Z	Output of Preregulator
4	2	C_T	Reset Delay Capacitor
5	4 − 7, 14 − 17	GND	Ground
6	10	Reset	Output of Reset Comparator
7	11	S_O	Output of Sense Comparator
8	12	V_{out}	Main Regulator Output
−	3, 8, 9, 13, 18	NC	No Connect

TYPICAL CHARACTERIZATION CURVES

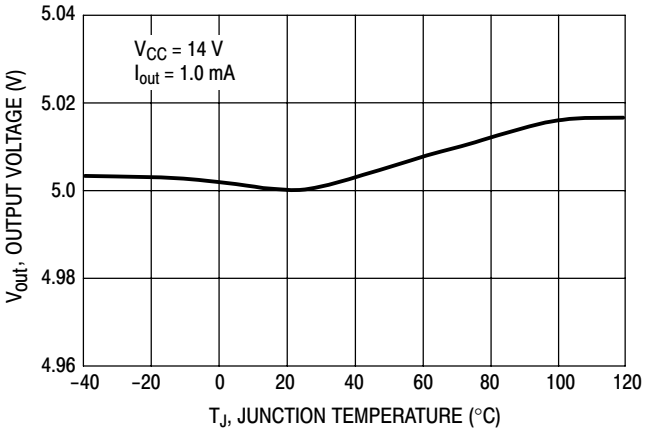

Figure 2. Output Voltage versus Junction Temperature

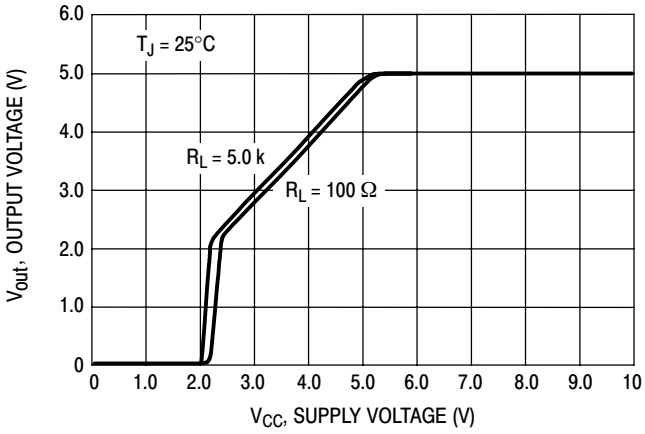

Figure 3. Output Voltage versus Supply Voltage

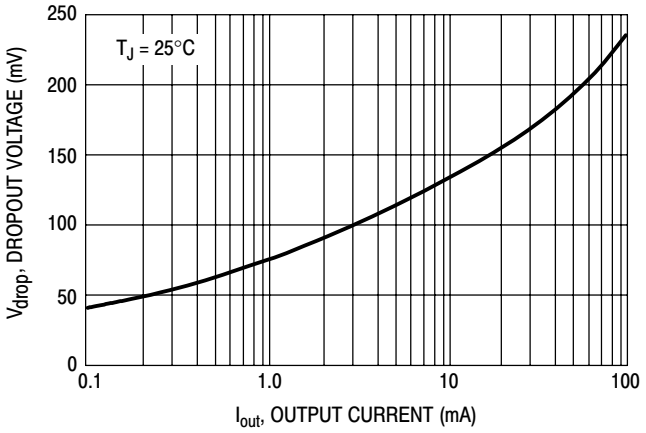

Figure 4. Dropout Voltage versus Output Current

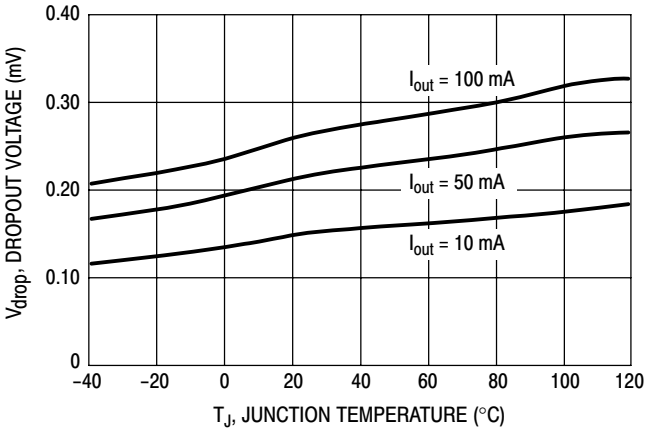

Figure 5. Dropout Voltage versus Junction Temperature

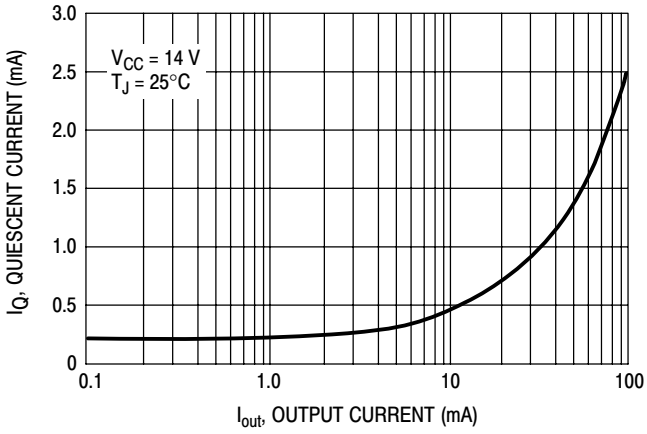

Figure 6. Quiescent Current versus Output Current

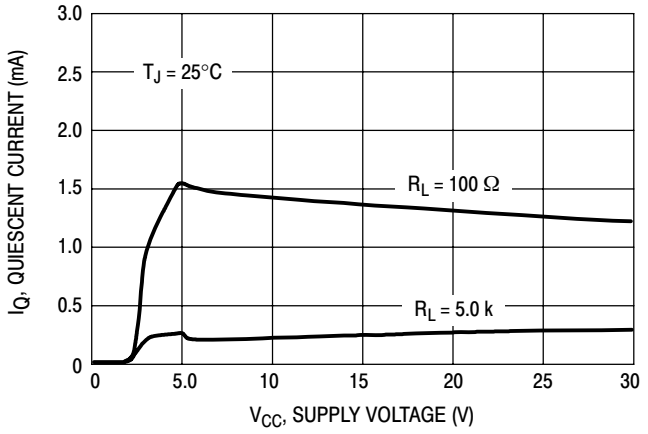

Figure 7. Quiescent Current versus Supply Voltage

TYPICAL CHARACTERIZATION CURVES (continued)

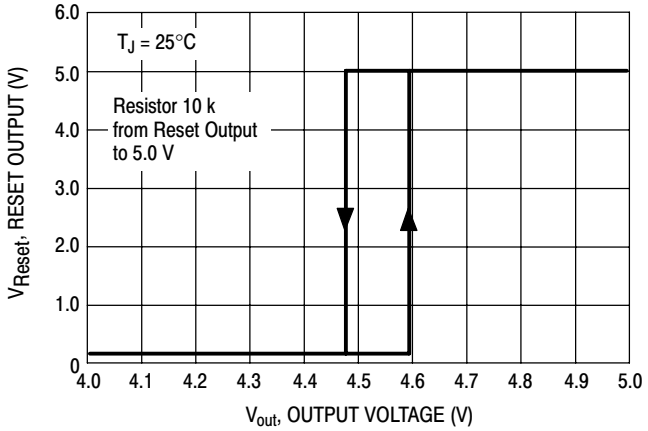

Figure 8. Reset Output versus Regulator Output Voltage

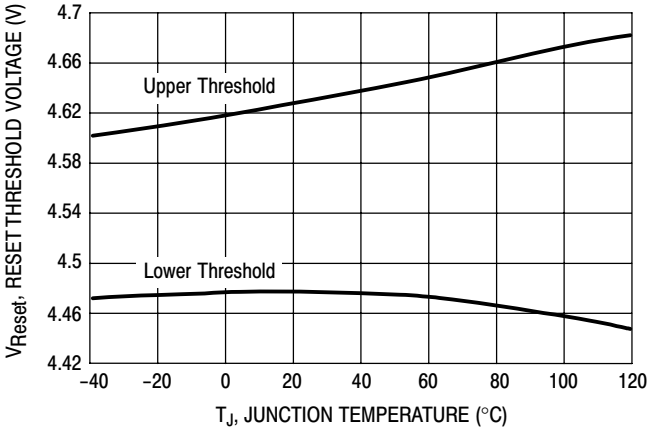

Figure 9. Reset Thresholds versus Junction Temperature

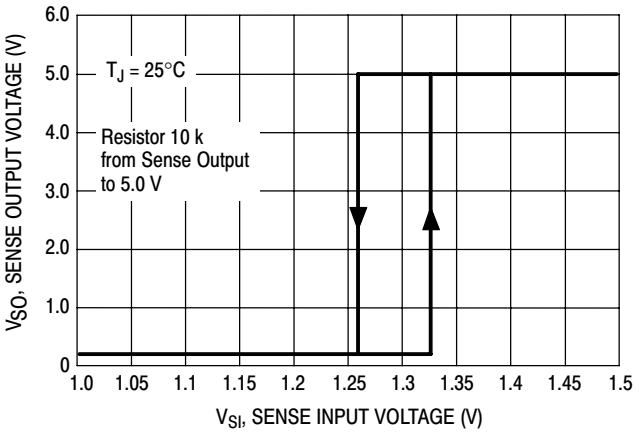

Figure 10. Sense Output versus Sense Input Voltage

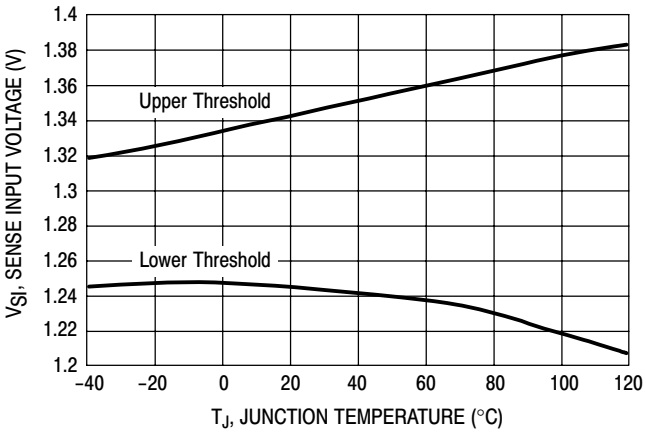

Figure 11. Sense Thresholds versus Junction Temperature

APPLICATION INFORMATION

Supply Voltage Transient

High supply voltage transients can cause a reset output signal perturbation. For supply voltages greater than 8.0 V the circuit shows a high immunity of the reset output against supply transients of more than 100 V/μs. For supply voltages less than 8.0 V supply transients of more than 0.4 V/μs can cause a reset signal perturbation. To improve the transient behavior for supply voltages less than 8.0 V a capacitor at Pin 3 can be used. A capacitor at Pin 3 (C3 ≤ 1.0 μF) reduces also the output noise.

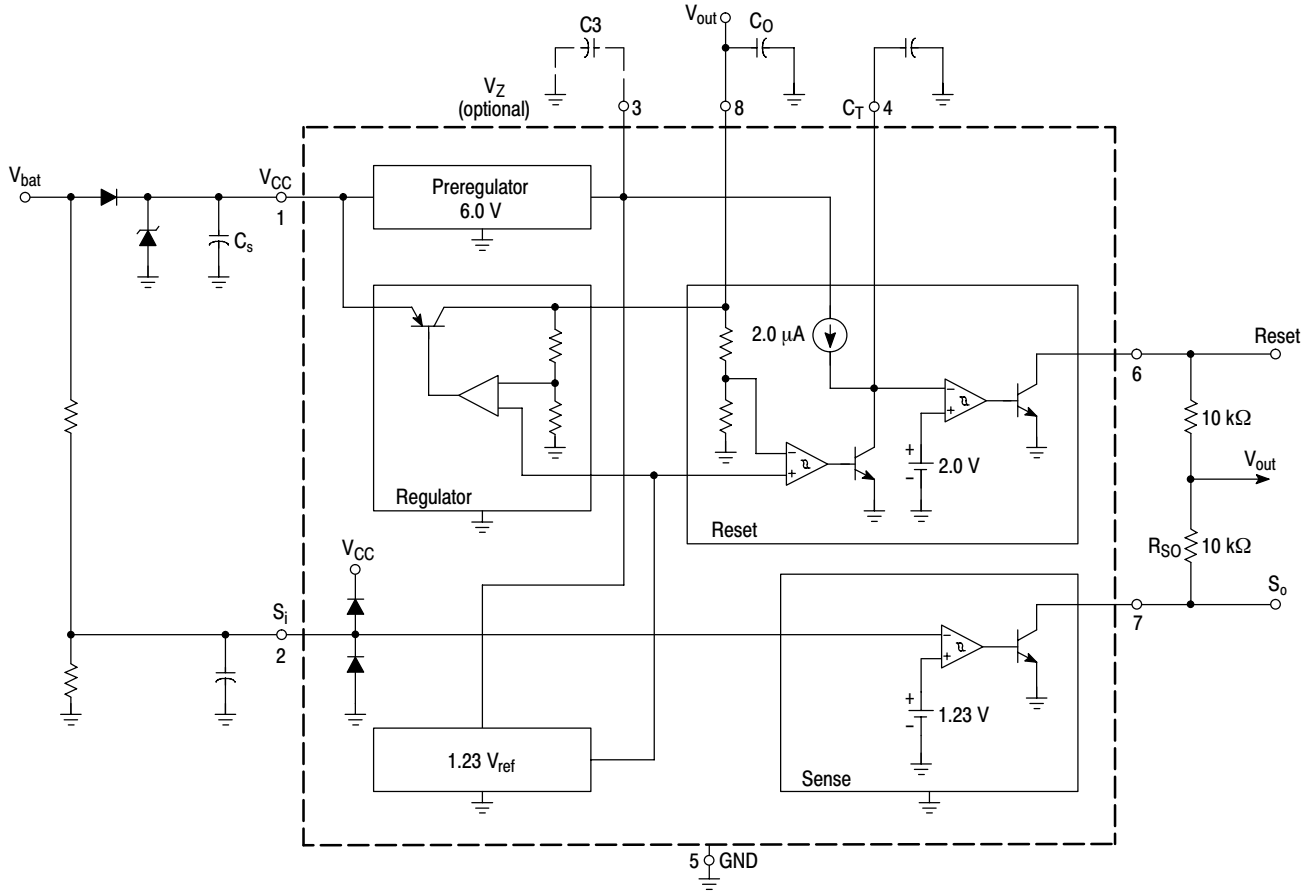

NOTE: 1. For stability: $C_S \geq 1.0$ μF, $C_O \geq 4.7$ μF, ESR < 10 Ω at 10 kHz
2. Recommended for application: $C_S = C_O = 10$ μF

Figure 12. Application Schematic

OPERATING DESCRIPTION

The L4949 is a monolithic integrated low dropout voltage regulator. Several outstanding features and auxiliary functions are implemented to meet the requirements of supplying microprocessor systems in automotive applications. Nevertheless, it is suitable also in other applications where the present functions are required. The modular approach of this device allows the use of other features and functions independently when required.

Voltage Regulator

The voltage regulator uses an isolated Collector Vertical PNP transistor as a regulating element. With this structure, very low dropout voltage at currents up to 100 mA is obtained. The dropout operation of the standby regulator is maintained down to 3.0 V input supply voltage. The output voltage is regulated up to the transient input supply voltage of 35 V. With this feature no functional interruption due to overvoltage pulses is generated.

The typical curve showing the standby output voltage as a function of the input supply voltage is shown in Figure 14.

The current consumption of the device (quiescent current) is less than 200 μA.

To reduce the quiescent current peak in the undervoltage region and to improve the transient response in this region, the dropout voltage is controlled. The quiescent current as a function of the supply input voltage is shown in Figure 15.

Short Circuit Protection:

The maximum output current is internally limited. In case of short circuit, the output current is foldback current limited as described in Figure 13.

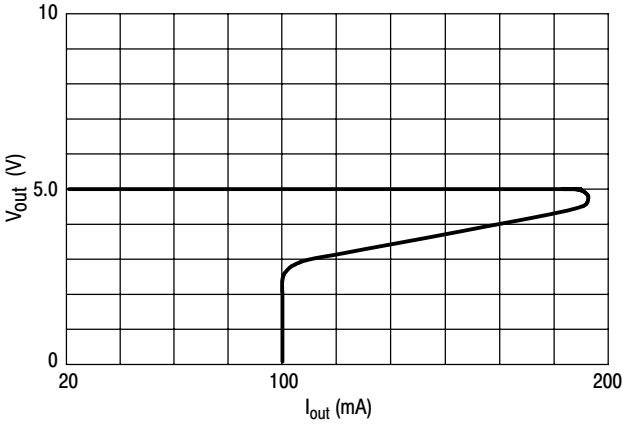

Figure 13. Foldback Characteristic of V_{out}

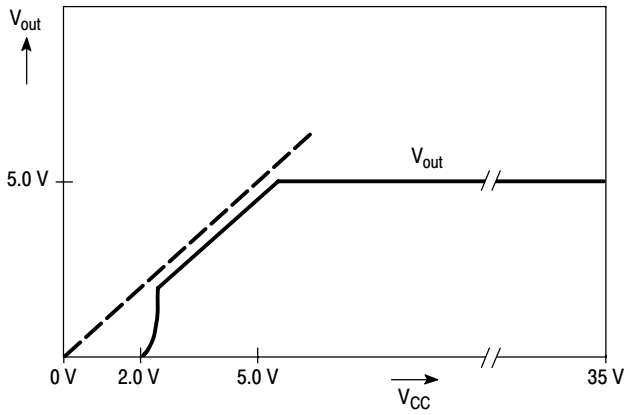

Figure 14. Output Voltage versus Supply Voltage

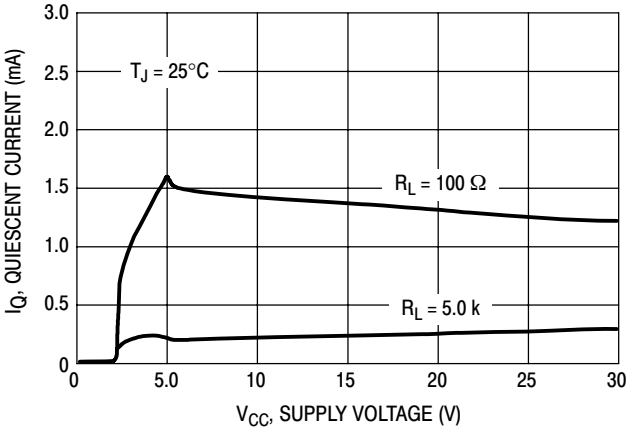

Figure 15. Quiescent Current versus Supply Voltage

Preregulator

To improve the transient immunity a preregulator stabilizes the internal supply voltage to 6.0 V. This internal voltage is present at Pin 3 (V_Z). This voltage should not be used as an output because the output capability is very small (≤ 100 μA).

This output may be used as an option when better transient behavior for supply voltages less than 8.0 V is required. In this case a capacitor (100 nF − 1.0 μF) must be connected between Pin 3 and GND. If this feature is not used Pin 3 must be left open.

Reset Circuit

The block circuit diagram of the reset circuit is shown in Figure 16.

The reset circuit supervises the output voltage. The reset threshold of 4.5 V is defined with the internal reference voltage and standby output divider.

The reset pulse delay time t_{RD}, is defined with the charge time of an external capacitor C_T:

$$t_{RD} = \frac{C_T \times 2.0\ V}{2.0\ \mu A}$$

The reaction time of the reset circuit originates from the discharge time limitation of the reset capacitor C_T and is proportional to the value of C_T. The reaction time of the reset circuit increases the noise immunity.

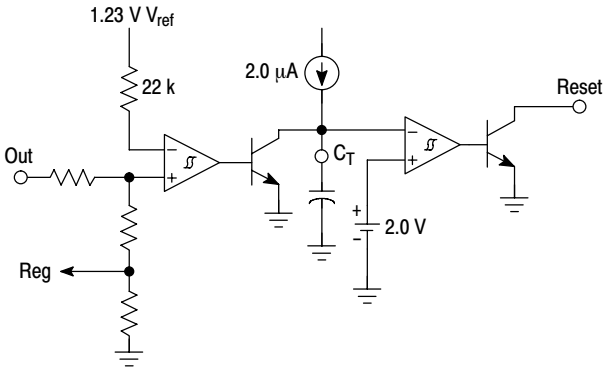

Figure 16. Reset Circuit

Standby output voltage drops below the reset threshold only a bit longer than the reaction time results in a shorter reset delay time.

The nominal reset delay time will be generated for standby output voltage drops longer than approximately 50 µs. The typical reset output waveforms are shown in Figure 17.

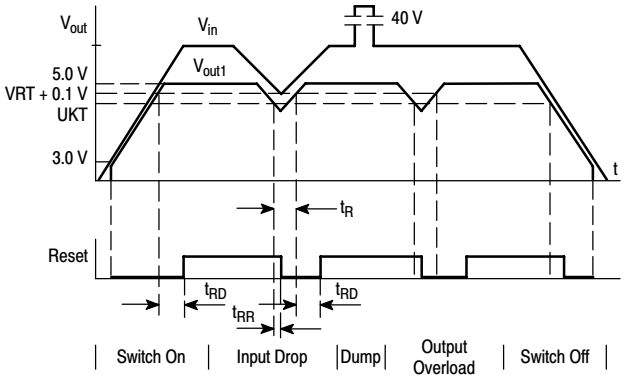

Figure 17. Typical Reset Output Waveforms

Sense Comparator

The sense comparator compares an input signal with an internal voltage reference of typical 1.23 V. The use of an external voltage divider makes this comparator very flexible in the application.

It can be used to supervise the input voltage either before or after the protection diode and to give additional information to the microprocessor like low voltage warnings.

ORDERING INFORMATION

Device	Operating Temperature Range	Package	Shipping†
L4949N	T_J = −40°C to +125°C	PDIP−8	50 Units / Rail
L4949NG		PDIP−8 (Pb−Free)	50 Units / Rail
L4949D		SOIC−8	98 Units / Rail
L4949DG		SOIC−8 (Pb−Free)	98 Units / Rail
L4949DR2		SOIC−8	2500 Units / Tape & Reel
L4949DR2G		SOIC−8 (Pb−Free)	2500 Units / Tape & Reel
NCV4949DG*		SOIC−8 (Pb−Free)	98 Units / Rail
NCV4949DR2*		SOIC−8	2500 Units / Tape & Reel
NCV4949DR2G*		SOIC−8 (Pb−Free)	2500 Units / Tape & Reel
NCV4949DWR2*		SOIC−20W	1000 Units / Tape & Reel
NCV4949DWR2G*		SOIC−20W (Pb−Free)	1000 Units / Tape & Reel

†For information on tape and reel specifications,including part orientation and tape sizes, please refer to our Tape and Reel Packaging Specifications Brochure, BRD8011/D.

*NCV4949: T_{low} = −40°C, T_{high} = +125°C. Guaranteed by design.
NCV prefix is for automotive and other applications requiring site and change control.

PACKAGE DIMENSIONS

N SUFFIX
PLASTIC PACKAGE
CASE 626−05
ISSUE L

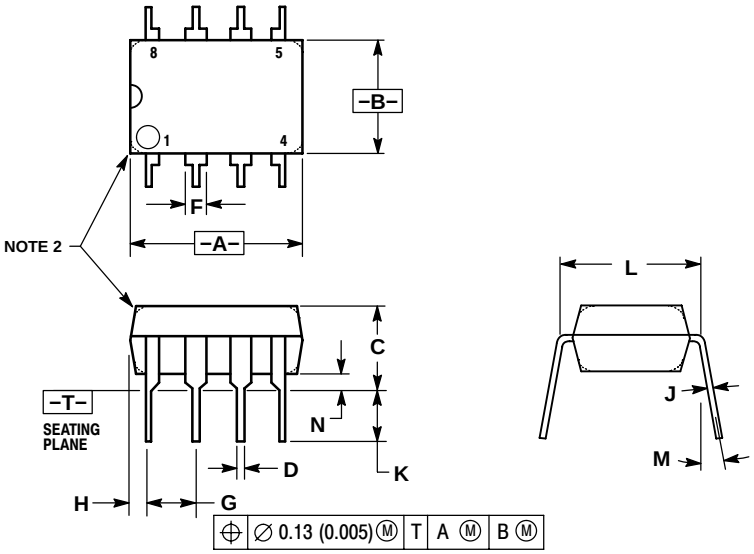

NOTES:
1. DIMENSION L TO CENTER OF LEAD WHEN FORMED PARALLEL.
2. PACKAGE CONTOUR OPTIONAL (ROUND OR SQUARE CORNERS).
3. DIMENSIONING AND TOLERANCING PER ANSI Y14.5M, 1982.

	MILLIMETERS		INCHES	
DIM	MIN	MAX	MIN	MAX
A	9.40	10.16	0.370	0.400
B	6.10	6.60	0.240	0.260
C	3.94	4.45	0.155	0.175
D	0.38	0.51	0.015	0.020
F	1.02	1.78	0.040	0.070
G	2.54 BSC		0.100 BSC	
H	0.76	1.27	0.030	0.050
J	0.20	0.30	0.008	0.012
K	2.92	3.43	0.115	0.135
L	7.62 BSC		0.300 BSC	
M	---	10°	---	10°
N	0.76	1.01	0.030	0.040

SOIC−20 WB
DW SUFFIX
CASE 751D−05
ISSUE G

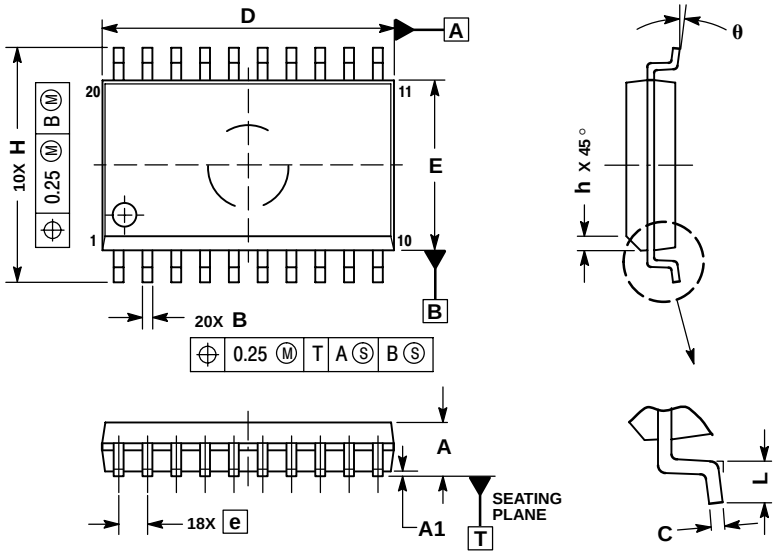

NOTES:
1. DIMENSIONS ARE IN MILLIMETERS.
2. INTERPRET DIMENSIONS AND TOLERANCES PER ASME Y14.5M, 1994.
3. DIMENSIONS D AND E DO NOT INCLUDE MOLD PROTRUSION.
4. MAXIMUM MOLD PROTRUSION 0.15 PER SIDE.
5. DIMENSION B DOES NOT INCLUDE DAMBAR PROTRUSION. ALLOWABLE PROTRUSION SHALL BE 0.13 TOTAL IN EXCESS OF B DIMENSION AT MAXIMUM MATERIAL CONDITION.

	MILLIMETERS	
DIM	MIN	MAX
A	2.35	2.65
A1	0.10	0.25
B	0.35	0.49
C	0.23	0.32
D	12.65	12.95
E	7.40	7.60
e	1.27 BSC	
H	10.05	10.55
h	0.25	0.75
L	0.50	0.90
θ	0°	7°

PACKAGE DIMENSIONS

SOIC−8
D SUFFIX
CASE 751−07
ISSUE AH

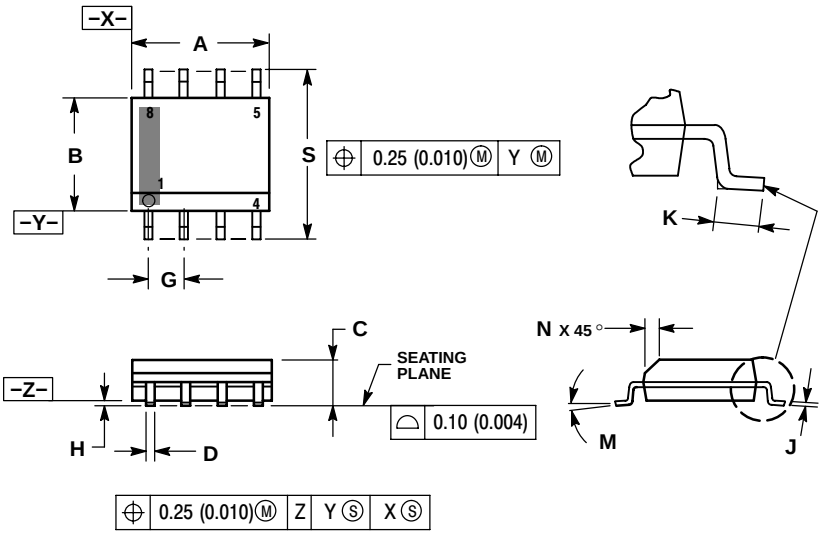

NOTES:
1. DIMENSIONING AND TOLERANCING PER ANSI Y14.5M, 1982.
2. CONTROLLING DIMENSION: MILLIMETER.
3. DIMENSION A AND B DO NOT INCLUDE MOLD PROTRUSION.
4. MAXIMUM MOLD PROTRUSION 0.15 (0.006) PER SIDE.
5. DIMENSION D DOES NOT INCLUDE DAMBAR PROTRUSION. ALLOWABLE DAMBAR PROTRUSION SHALL BE 0.127 (0.005) TOTAL IN EXCESS OF THE D DIMENSION AT MAXIMUM MATERIAL CONDITION.
6. 751−01 THRU 751−06 ARE OBSOLETE. NEW STANDARD IS 751−07.

	MILLIMETERS		INCHES	
DIM	MIN	MAX	MIN	MAX
A	4.80	5.00	0.189	0.197
B	3.80	4.00	0.150	0.157
C	1.35	1.75	0.053	0.069
D	0.33	0.51	0.013	0.020
G	1.27 BSC		0.050 BSC	
H	0.10	0.25	0.004	0.010
J	0.19	0.25	0.007	0.010
K	0.40	1.27	0.016	0.050
M	0 °	8 °	0 °	8 °
N	0.25	0.50	0.010	0.020
S	5.80	6.20	0.228	0.244

SOLDERING FOOTPRINT*

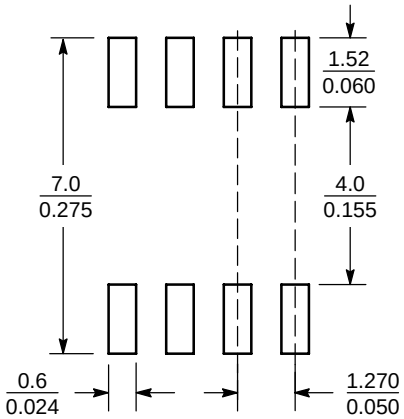

SCALE 6:1 $\left(\frac{\text{mm}}{\text{inches}}\right)$

*For additional information on our Pb−Free strategy and soldering details, please download the ON Semiconductor Soldering and Mounting Techniques Reference Manual, SOLDERRM/D.

ON Semiconductor and ON are registered trademarks of Semiconductor Components Industries, LLC (SCILLC). SCILLC reserves the right to make changes without further notice to any products herein. SCILLC makes no warranty, representation or guarantee regarding the suitability of its products for any particular purpose, nor does SCILLC assume any liability arising out of the application or use of any product or circuit, and specifically disclaims any and all liability, including without limitation special, consequential or incidental damages. “Typical” parameters which may be provided in SCILLC data sheets and/or specifications can and do vary in different applications and actual performance may vary over time. All operating parameters, including “Typicals” must be validated for each customer application by customer’s technical experts. SCILLC does not convey any license under its patent rights nor the rights of others. SCILLC products are not designed, intended, or authorized for use as components in systems intended for surgical implant into the body, or other applications intended to support or sustain life, or for any other application in which the failure of the SCILLC product could create a situation where personal injury or death may occur. Should Buyer purchase or use SCILLC products for any such unintended or unauthorized application, Buyer shall indemnify and hold SCILLC and its officers, employees, subsidiaries, affiliates, and distributors harmless against all claims, costs, damages, and expenses, and reasonable attorney fees arising out of, directly or indirectly, any claim of personal injury or death associated with such unintended or unauthorized use, even if such claim alleges that SCILLC was negligent regarding the design or manufacture of the part. SCILLC is an Equal Opportunity/Affirmative Action Employer. This literature is subject to all applicable copyright laws and is not for resale in any manner.

PUBLICATION ORDERING INFORMATION

LITERATURE FULFILLMENT:
Literature Distribution Center for ON Semiconductor
P.O. Box 5163, Denver, Colorado 80217 USA
Phone: 303−675−2175 or 800−344−3860 Toll Free USA/Canada
Fax: 303−675−2176 or 800−344−3867 Toll Free USA/Canada
Email: orderlit@onsemi.com

N. American Technical Support: 800−282−9855 Toll Free USA/Canada
Europe, Middle East and Africa Technical Support:
Phone: 421 33 790 2910
Japan Customer Focus Center
Phone: 81−3−5773−3850

ON Semiconductor Website: **www.onsemi.com**

Order Literature: http://www.onsemi.com/orderlit

For additional information, please contact your local Sales Representative