78L05

Positive-Voltage Regulators

- **3-Terminal Regulators**
- **Output Current up to 100 mA**
- **No External Components**
- **Internal Thermal-Overload Protection**
- **Internal Short-Circuit Current Limiting**
- **Provided Pb-Free packages from the end of 2004**

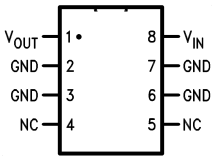

SO-8

78L05ACM

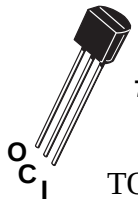

78L05ACZ-Bulk

78L05ACZM-Ammo

TO-92

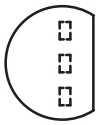

INPUT
COMMON
OUTPUT

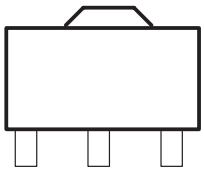

OUTPUT GND INPUT

SOT-89

78L05CPK

description

This series of fixed-voltage integrated-circuit voltage regulators is designed for a wide range of applications. These applications include on-card regulation for elimination of noise and distribution problems associated with single-point regulation. In addition, they can be used with power-pass elements to make high-current voltage regulators. One of these regulators can deliver up to 100 mA of output current. The internal limiting and thermal-shutdown features of these regulators make them essentially immune to overload. When used as a replacement for a zener diode-resistor combination, an effective improvement in output impedance can be obtained, together with lower bias current.

electrical characteristics at specified virtual junction temperature, V_I = 10 V, I_O= 40 mA (unless otherwise noted)

PARAMETER	TEST CONDITIONS	T ‡	78L05			UNIT
			MIN	TYP	MAX	
Output voltage		25°C	4.8	5	5.2	V
	I_O=1mA to 40MA, V =7V to20V	Full range	4.75	5	5.25	
	I_O = 1 mA to 70 mA	Full range	4.75	5	5.25	
Input voltage regulation	V_I = 7 V to 20 V	25°C		32	150	mV
	V_I = 8 V to 20 V			26	100	
Ripple rejection	V_I = 8 V to 18 V, f = 120 Hz	25°C	41	49		dB
Output voltage regulation	I_O = 1 mA to 100 mA	25°C		15	60	mV
	I_O = 1 mA to 40 mA			8	30	
Output noise voltage	f = 10 Hz to 100 kHz	25°C		42		µV
Dropout voltage		25°C		1.7		V
Bias current		25°C		3.8	6	mA
		125°C			5.5	
Bias current change	V_I = 8 V to 20 V	Full range			1.5	mA
	I_O = 1 mA to 40 mA				0.1	

‡ Pulse-testing techniques maintain T_J as close to T_A as possible. Thermal effects must be taken into account separately. All characteristics are measured with a 0.33-µF capacitor across the input and a 0.1-µF capacitor across the output. Full range for the 78L05 is T_J = 0°C to 70°C

absolute maximum ratings over operating temperature range (unless othewise noted)

78L05	PARAMETER	UNIT
Input voltage, V_I	30	V
Virtual junction temperature range, T_J	150	°C
Lead temperature 1,6 mm (1/16 inch) from case for 10 seconds	260	°C
Storage temperature range, T_{stg}	–65 to 150	°C

recommended operating conditions

78L05	MIN	MAX	UNIT
Input voltage, V_I	7	20	V
Output current, I_O		100	mA
Operating virtual junction temperature, T_J	0	70	°C

Pad Location 78L05

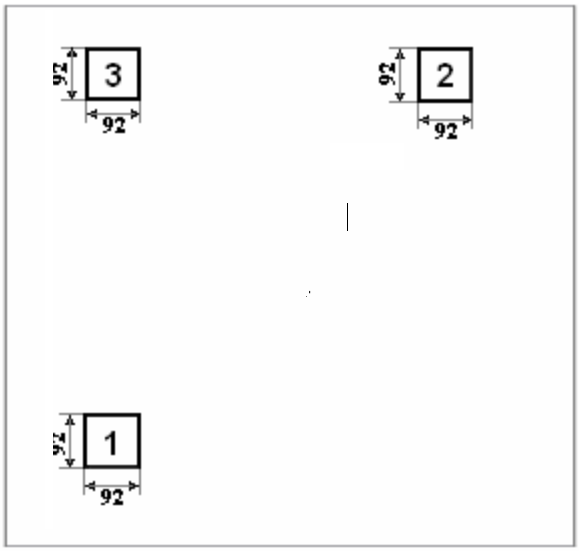

Chip size 0.75 x 0.8 mm

Pad N	Pad Name	X (um)	Y (um)
1	Ground	63	63
2	Input	595	645
3	Output	63	645

TO-92 PACKAGE OUTLINE DIMENSIONS

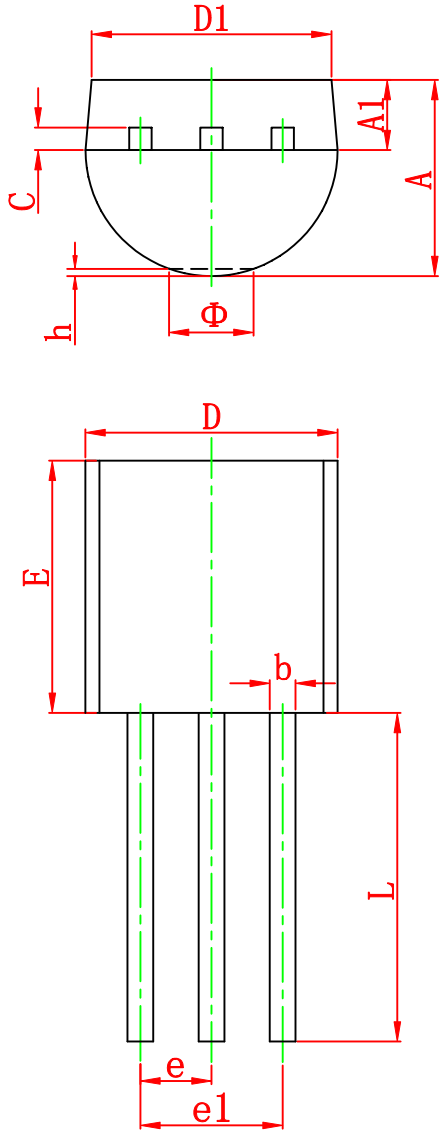

Symbol	Dimensions In Millimeters		Dimensions In Inches	
	Min	Max	Min	Max
A	3.300	3.700	0.130	0.146
A1	1.100	1.400	0.043	0.055
b	0.380	0.550	0.015	0.022
c	0.360	0.510	0.014	0.020
D	4.400	4.700	0.173	0.185
D1	3.430		0.135	
E	4.300	4.700	0.169	0.185
e	1.270 TYP		0.050 TYP	
e1	2.440	2.640	0.096	0.104
L	14.100	14.500	0.555	0.571
Φ		1.600		0.063
h	0.000	0.380	0.000	0.015

SOT-89-3L PACKAGE OUTLINE DIMENSIONS

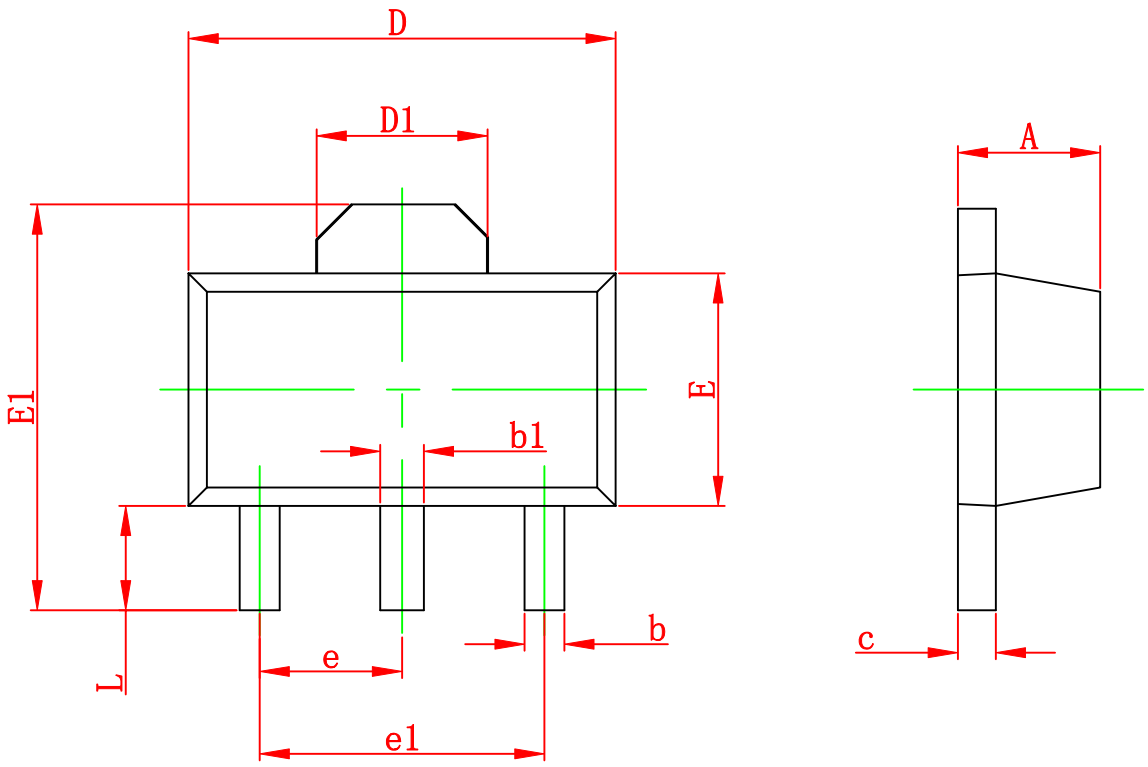

Symbol	Dimensions In Millimeters		Dimensions In Inches	
	Min	Max	Min	Max
A	1.400	1.600	0.055	0.063
b	0.320	0.520	0.013	0.197
b1	0.400	0.580	0.016	0.023
c	0.350	0.440	0.014	0.017
D	4.400	4.600	0.173	0.181
D1	1.550 REF		0.061 REF	
E	2.300	2.600	0.091	0.102
E1	3.940	4.250	0.155	0.167
e	1.500 TYP		0.060TYP	
e1	3.000 TYP		0.118TYP	
L	0.900	1.200	0.035	0.047

SOP8 PACKAGE OUTLINE DIMENSIONS

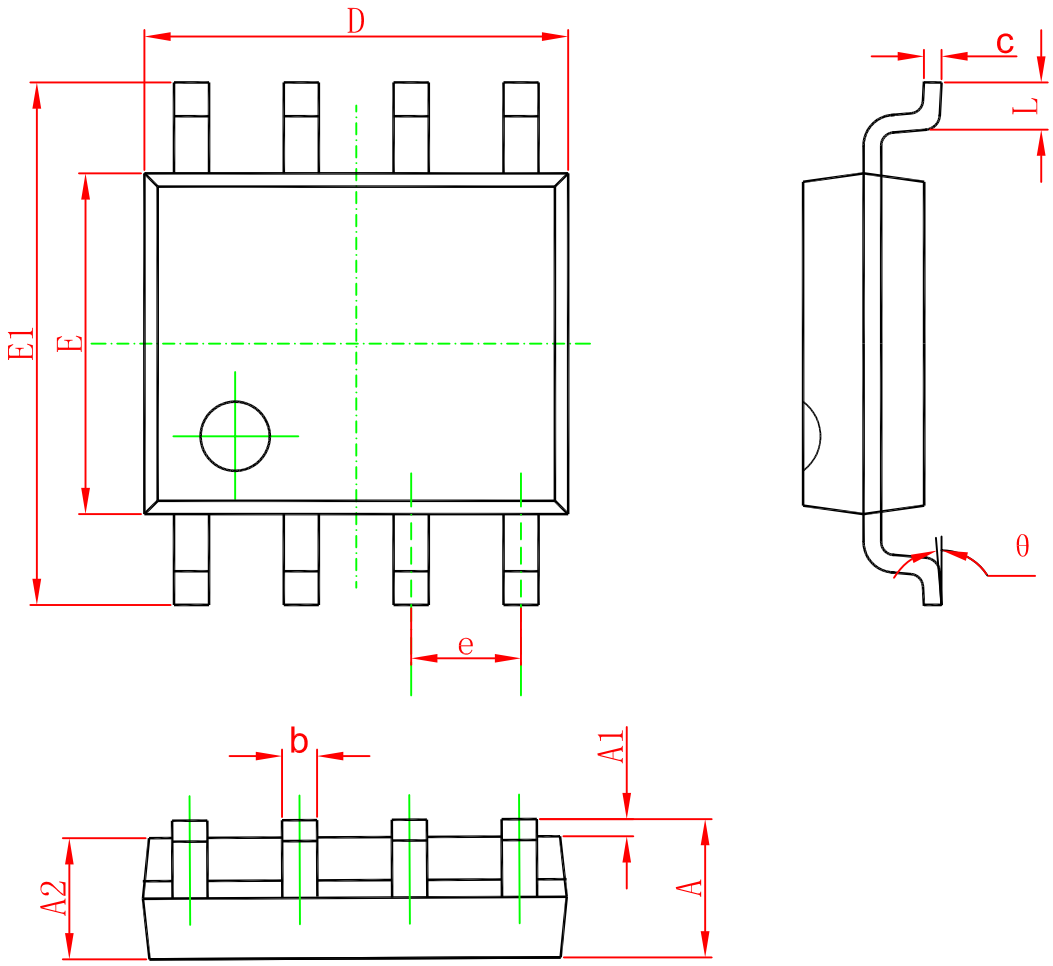

Symbol	Dimensions In Millimeters		Dimensions In Inches	
	Min	Max	Min	Max
A	1.350	1.750	0.053	0.069
A1	0.100	0.250	0.004	0.010
A2	1.350	1.550	0.053	0.061
b	0.330	0.510	0.013	0.020
c	0.170	0.250	0.006	0.010
D	4.700	5.100	0.185	0.200
E	3.800	4.000	0.150	0.157
E1	5.800	6.200	0.228	0.244
e	1.270(BSC)		0.050(BSC)	
L	0.400	1.270	0.016	0.050
θ	0°	8°	0°	8°